Passive base for Hamamatsu R5912

R5912 Prototype Base

- *Prototype for the possible new Auger PMT*
- Works with **R5912** / R5912-03
- E678-20B socket
- Compatible with UB / UUB (tested)
- BoM cost
  - 280 EUR - HV module
  - 20 EUR - Socket
  - 10 EUR - amplifier module
  - 15 EUR - PCB
  - 35 EUR - rest
- Power: 1.5 W stby, 4.5 W @ 2000V
- Optimization still ongoing

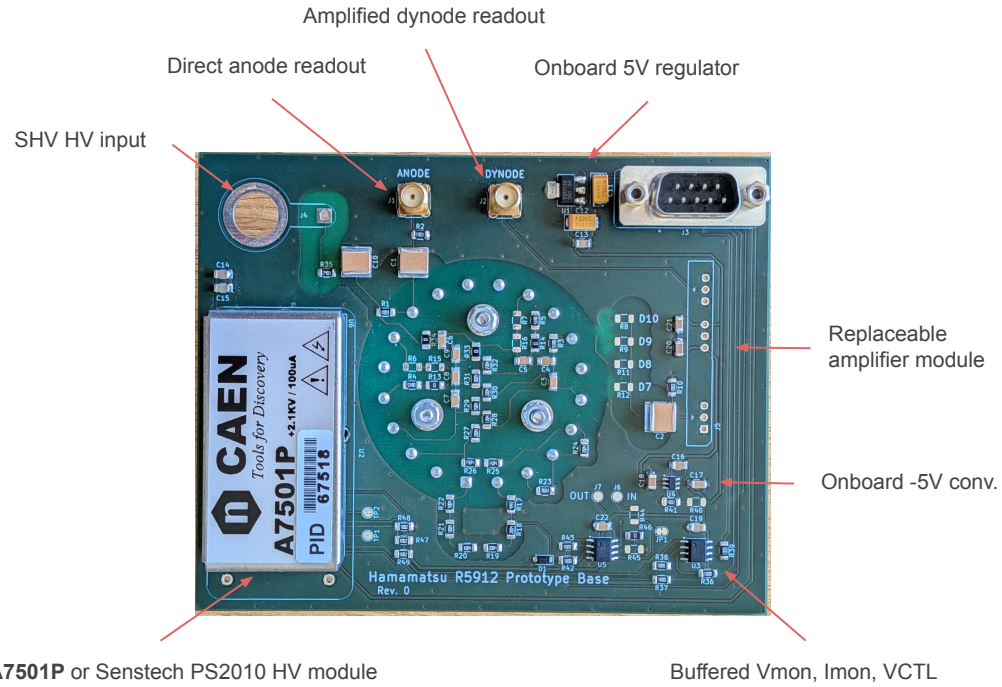

Divider

- *Adapted from Auger Photonis base*
- Simple passive design
- Start with suggested dynode ratios
  - $R_{DIV} \approx 25$ MOhm
  - Hamamatsu E7694-03 has 4 MOhm
- Taper on last stages
- Backed by capacitors on last stages
- Dynode pickup

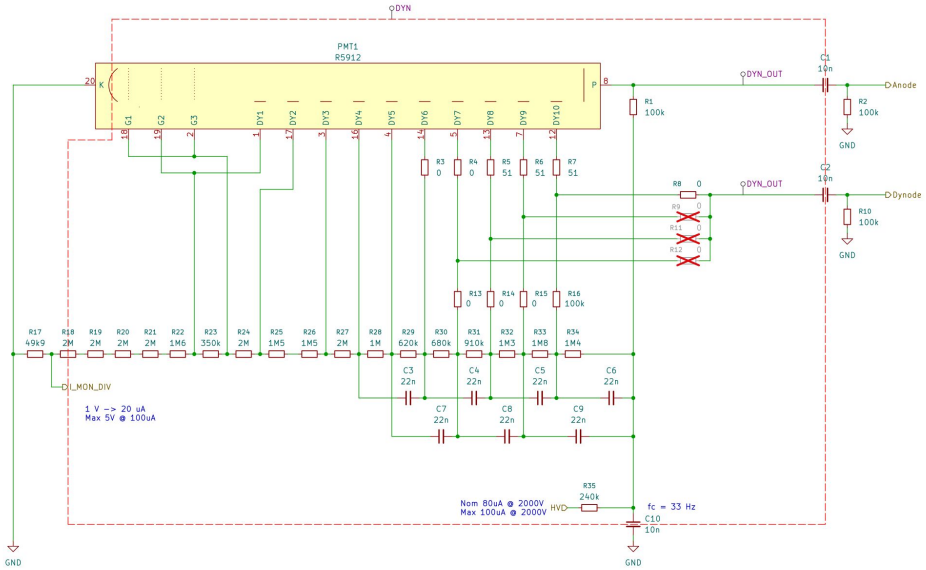

Divider schematic.

		K	Dy1	G2	G1	G3	Dy2	Dy3	Dy4	Dy5	Dy6	Dy7	Dy8	Dy9	Dy10	P
R5912/-100	1500	16.8	0	0.6	0	3.4	5	3.33	1.67	1	1.2	1.5	2.2	3	2.4	
R7081/-100												Capacitors in μF	0.01	0.01	0.01	

Divider ratios specified by Hamamatsu.

HV Modules

- Auger tank: Senstech PS2010
  - Reliability problems @ Auger
- Auger SPMT: CAEN A7501
- Auger SSD: iseg base + HV conv.
- Other suggestions?

CAEN A7501

+ Low power consumption
+ Used at Auger (1600+ units)
– Costly

Module	Max current	Max voltage	Max. Ripple	Input current stby / full	Price / 1pc
Senstech PS2010/12	100uA	+2000V	40mV	?/27 mA	300 EUR
Hamamatsu C9619-51	2mA	+2000V	60mV	100 / 460 mA	240 EUR
Hamamatsu C11152-51	1mA	+1500V	1mV	50 / 220 mA	200 EUR
CAEN A7501	100uA	+2100V	5mV	?/33 mA	280 EUR
CAEN A7520	700uA	+2000V	8mV	?/210 mA	?
XP A20P-12	500uA	+2000V	6V	100/185 mA	*226 EUR*
XP AG20P-5	500uA	+2000V	6V	300/500 mA	*224 EUR*
XP C20	500uA	+2000V	40mV	100/250 mA	*332 EUR*
XP CA20P	500uA	+2000V	20mV	100/550 mA	*392 EUR*
XP CA20P-T	500uA	+2000V	20mV	100/220 mA	?
TDK CHVM2-12-2000PW	1mA	+2000V	50mV	?/340 mA	*325 EUR*
Ultravolt 2A12-P4	2mA	+2000V	200mV?	100 / 400 mA	*469 EUR*
Ultravolt 2AA12-N4	2mA	+2000V	200mV?	100 / 450 mA	*577 EUR*
SDS WRM12N2-1-C2.5-*	0.5mA	+2000V	40mV	50/180 mA	*310 EUR*
HVM SMHV0520	0.5mA	+2000V	200mV	35/350 mA	*273 EUR*
HVM SK1230	0.5mA	+2000V	200mV	35/350 mA	*260 EUR*
HVM RK1220	0.5mA	+200V	200mV	35/350 mA	*220 EUR*
HVM UMHV1220	250uA	+2000V	2V	10/100 mA	*190 EUR*

Dynode amplifier

- Increase SNR of small signals
- Requirements
  - Gain: ~ -45
  - BW: > 30MHz
  - Power: ± 3V3
- Auger design with dual stage **AD8012**

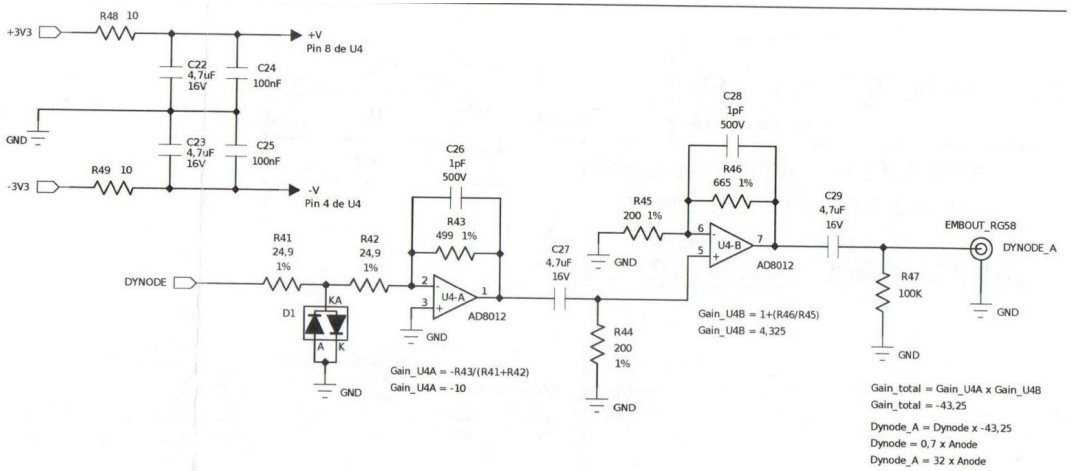

Auger LPMT base dynode amplifier.

Ringing

- Resonance in parasitic LC circuit
  - Dyn - A capacitance
  - Lead inductance
- Increase damping resistors
- Effect of isolation capacitor ESL/ESR?

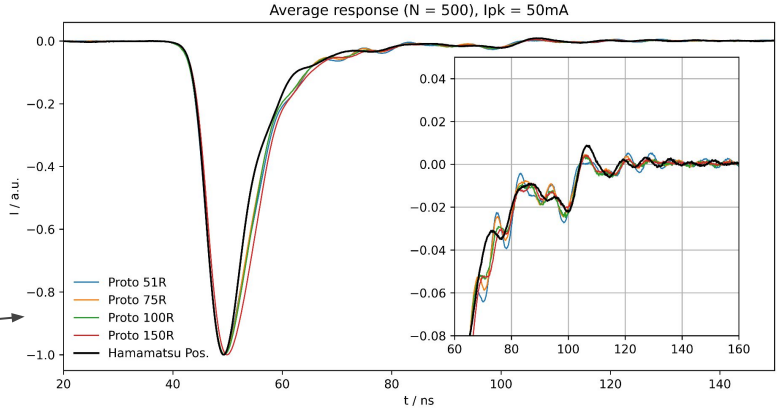

Anode ringing for different damping resistors.

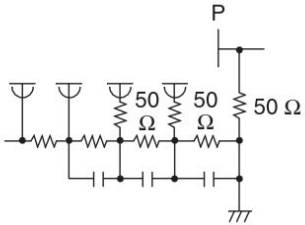

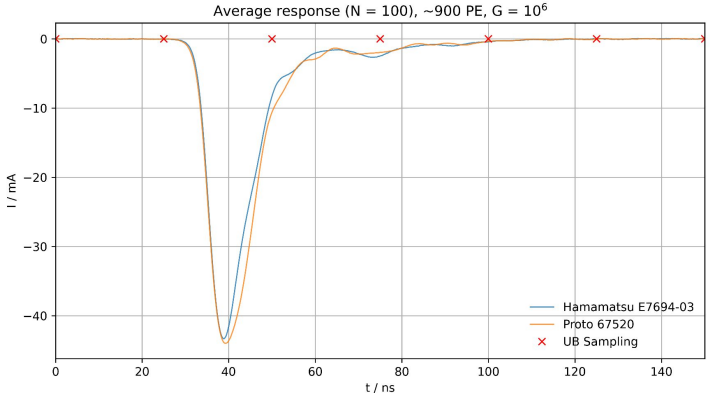

Comparison of Hamatsu and Prototype base.

Adaptation for PEPS

- *Design requirements?*
- *PMT performance?*

Adaptation for PEPS

- Flying leads
- Temperature sensor
- Increase margin on some components
- Testpoints & jig

TBD - Other modifications

- Amplified anode or dynode?
- Is buffered IO necessary?
- Connectors or direct solder cables?
- Ferrites on IO?
- Other ideas?

Auger XP1805 base.

Mechanics

- PCB conformal coating
- Flying leads
  - Spot welding
- Potting silicone
- Mechanical interface

Auger XP1805 with potting silicone and nick

Conclusion

- ✔ Auger base adapted for Hamamatsu R5912
- ✔ Proven robust design
- ✔ Interfaces with UB
- – Some changes required for production version
- – Optimize PMT performance and other base tweaks
- – Define mechanical assembly
- × High cost (280 EUR for HV module)

Prototype base assembled and working in Prague and soon in Brussels.

Questions?